slp 287/04

Work Order ID 68041

Tuesday, April 05, 2011 3:12:34 PM

Item ID: D3915-041 **Accept** **Setup Start** **Stop**

Revision ID:

Item Name: Light Lid Assemby, Long Basket

Start Date: 4/5/2011 **Start Qty:** 1.00 **Cust Item ID:**

Required Date: 4/8/2011 **Req'd Qty:** 1.00 **Customer:**

Reference:

Run Start **Stop**

Approvals: **Process Plan:** _____ **Date:** _____ **Tooling:** _____ **Date:** _____

QC: _____ **Date:** _____ **SPC (Y/N):** _____ **Date:** _____

Sequence ID/ Work Center ID	Operation Description	Set Up/ Run Hours	Tool ID	Tool #	Plan Code	Accept Qty	Reject Qty	Reject Number	Insp. Stamp

Draw Nbr	Revision Nbr
D3915	C

100 Weld per dwg A/R Aluminum rod Batch: M112860 0.00

Large Fab

Large Fab

Large Fab

Memo 0.00

1- assemble ribs , weld as per dwg D3915 using DT9606A. When welding D4019-3, weld top and bottom then make a small hole in the weld to let air out. Then weld remaining sides of D4019-3 Rib. Let it cool down, then block holes with weld.

****DO NOT WELD THE (4) CORNERS. GRIND OFF CORNERS TO HAVE A 1/8" GAP TO GET THE ACID AND ALODINE OUT OF BASKET LID FRAME****

2- weld hinge, label plate and Mounting plates as per dwg D3915

SG 11.04.07 (1x)

110 QC9- Inspect visual per QSI004- Fusion Welds 0.00

QC

Quality Control

Memo 0.00

1 8 BE 11/04/07

Dart Aerospace Ltd

W/O:		WORK ORDER CHANGES					
DATE	STEP	PROCEDURE CHANGE	By	Date	Qty	Approval Chief Eng / Prod Mgr	Approval QC Inspector

Part No: _____ **PAR #:** _____ **Fault Category:** _____ **NCR:** Yes No **DQA:** _____ **Date:** _____

Resolution: _____ **Disposition:** _____ **QA: N/C Closed:** _____ **Date:** _____

NCR:		WORK ORDER NON-CONFORMANCE (NCR)						
DATE	STEP	Description of NC Section A	Corrective Action Section B			Verification Section C	Approval Chief Eng	Approval QC Inspector
			Initial Chief Eng	Action Description Chief Eng	Sign & Date			

NOTE: Date & initial all entries

Work Order ID 68041

Tuesday, April 05, 2011 3:12:34 PM

Item ID: D3915-041 **Accept** **Setup Start** **Stop**

Revision ID:

Item Name: Light Lid Assemby, Long Basket

Start Date: 4/5/2011 **Start Qty:** 1.00 **Cust Item ID:**

Required Date: 4/8/2011 **Req'd Qty:** 1.00 **Customer:**

Reference:

Run Start **Stop**

Approvals: **Process Plan:** _____ **Date:** _____ **Tooling:** _____ **Date:** _____

QC: _____ **Date:** _____ **SPC (Y/N):** _____ **Date:** _____

Sequence ID/ Work Center ID	Operation Description	Set Up/ Run Hours	Tool ID	Tool #	Plan Code	Accept Qty	Reject Qty	Reject Number	Insp. Stamp
120	QC5- Inspect part completeness to step on W/O	0.00							
QC	**Memo**	0.00							
Quality Control									
130	Chemical Conversion Coat per QSI005 4.1	0.00				1		11-4-8	
HandFinish	**Memo**	0.00							
Hand Finishing	***ENSURE TO RINSE CAREFULLY ACID AND ALODINE***								
140	Weld per dwg A/R Aluminum rod Batch:_____ M112860	0.00						11.04.11	1x
Large Fab	**Memo**	0.00							
Large Fab	1- weld (4) corners								

Dart Aerospace Ltd

W/O:		WORK ORDER CHANGES					
DATE	STEP	PROCEDURE CHANGE	By	Date	Qty	Approval Chief Eng / Prod Mgr	Approval QC Inspector

Part No: _____ **PAR #:** _____ **Fault Category:** _____ **NCR:** Yes No **DQA:** _____ **Date:** _____

Resolution: _____ **Disposition:** _____ **QA: N/C Closed:** _____ **Date:** _____

NCR:		WORK ORDER NON-CONFORMANCE (NCR)						
DATE	STEP	Description of NC Section A	Corrective Action Section B			Verification Section C	Approval Chief Eng	Approval QC Inspector
			Initial Chief Eng	Action Description Chief Eng	Sign & Date			

NOTE: Date & initial all entries

H:\fFORMS\Quality Assurance\approved QA\NCRWO RevE

Work Order ID 68041

Tuesday, April 05, 2011 3:12:35 PM

Item ID: D3915-041 **Accept** **Setup Start** **Stop**

Revision ID:

Item Name: Light Lid Assemby, Long Basket

Start Date: 4/5/2011 **Start Qty:** 1.00 **Cust Item ID:**

Required Date: 4/8/2011 **Req'd Qty:** 1.00 **Customer:**

Reference:

Run Start **Stop**

Approvals: **Process Plan:** _____ **Date:** _____ **Tooling:** _____ **Date:** _____

QC: _____ **Date:** _____ **SPC (Y/N):** _____ **Date:** _____

Sequence ID/ Work Center ID	Operation Description	Set Up/ Run Hours	Tool ID	Tool #	Plan Code	Accept Qty	Reject Qty	Reject Number	Insp. Stamp
150 QC Quality Control	QC9- Inspect visual per QSI004- Fusion Welds **Memo**	0.00 0.00				*1	0	BE	11/04/11
155 QC Quality Control	QC6- Inspect dimensions to drawing **Memo** ***inspect fit of lid with base***	0.00 0.00	Sidoulu			(1)			
157 HandFinish Hand Finishing	Chemical Conversion Coat per QSI005 4.1 **Memo** 1- realodine corners ***do not acid etch***	0.00 0.00				1	BR	11-4-12.	

Dart Aerospace Ltd

W/O:		WORK ORDER CHANGES					
DATE	STEP	PROCEDURE CHANGE	By	Date	Qty	Approval Chief Eng / Prod Mgr	Approval QC Inspector

Part No: _____ **PAR #:** _____ **Fault Category:** _____ **NCR:** Yes No **DQA:** _____ **Date:** _____

Resolution: _____ **Disposition:** _____ **QA: N/C Closed:** _____ **Date:** _____

NCR:		WORK ORDER NON-CONFORMANCE (NCR)						
DATE	STEP	Description of NC Section A	Corrective Action Section B			Verification Section C	Approval Chief Eng	Approval QC Inspector
			Initial Chief Eng	Action Description Chief Eng	Sign & Date			

NOTE: Date & initial all entries

Work Order ID 68041

Tuesday, April 05, 2011 3:12:35 PM

Item ID: D3915-041 **Accept** **Setup Start** **Stop**

Revision ID:

Item Name: Light Lid Assemby, Long Basket

Start Date: 4/5/2011 **Start Qty:** 1.00 **Cust Item ID:**

Required Date: 4/8/2011 **Req'd Qty:** 1.00 **Customer:**

Reference:

Run Start **Stop**

Approvals: **Process Plan:** _____ **Date:** _____ **Tooling:** _____ **Date:** _____

QC: _____ **Date:** _____ **SPC (Y/N):** _____ **Date:** _____

Sequence ID/ Work Center ID	Operation Description	Set Up/ Run Hours	Tool ID	Tool #	Plan Code	Accept Qty	Reject Qty	Reject Number	Insp. Stamp
160	White Gloss(Ref:4.3.5.1) per QSI005 4.3-Alum	0.00							
Powdercoat	M 116964.					1	BK 11-4-12		
Powder Coating	**Memo**	0.00							
	1- touch up corner with alodine only 2- Plug holes prior to								
	1ST COAT: START TIME: 9:20 OVEN TEMPERATURE: 320° FINISH TIME: 9:50 ********** 2nd coat if necessary ********** 2ND COAT: START TIME: _____ OVEN TEMPERATURE: _____ FINISH TIME: _____								
170	QC3- Inspect Part Finish	0.00							
QC						1	f	11/04/12	
Quality Control	**Memo**	0.00							

Dart Aerospace Ltd

W/O:		WORK ORDER CHANGES					
DATE	STEP	PROCEDURE CHANGE	By	Date	Qty	Approval Chief Eng / Prod Mgr	Approval QC Inspector

Part No: _____ **PAR #:** _____ **Fault Category:** _____ **NCR:** Yes No **DQA:** _____ **Date:** _____

Resolution: _____ **Disposition:** _____ **QA: N/C Closed:** _____ **Date:** _____

NCR:		WORK ORDER NON-CONFORMANCE (NCR)						
DATE	STEP	Description of NC Section A	Corrective Action Section B			Verification Section C	Approval Chief Eng	Approval QC Inspector
			Initial Chief Eng	Action Description Chief Eng	Sign & Date			

NOTE: Date & initial all entries

H:\fFORMS\Quality Assurance\approved QA\NCRWO RevE

Work Order ID 68041

Tuesday, April 05, 2011 3:12:35 PM

Item ID: D3915-041 **Accept** **Setup Start**

Revision ID: **Stop**

Item Name: Light Lid Assemby, Long Basket

Start Date: 4/5/2011 **Start Qty:** 1.00 **Cust Item ID:**

Required Date: 4/8/2011 **Req'd Qty:** 1.00 **Customer:**

Reference:

Run Start

Approvals: **Process Plan:** _____ **Date:** _____ **Tooling:** _____ **Date:** _____

Stop

QC: _____ **Date:** _____ **SPC (Y/N):** _____ **Date:** _____

Sequence ID/ Work Center ID	Operation Description	Set Up/ Run Hours	Tool ID	Tool #	Plan Code	Accept Qty	Reject Qty	Reject Number	Insp. Stamp
180 HandFinish Hand Finishing	Assemble as per dwg	0.00							11/04/13 1
	Memo 1- Install webbing as per dwg 2- Install placard and label as per dwg	0.00							
190 QC Quality Control	QC5- Inspect part completeness to step on W/O	0.00							11 04 13 1
	Memo	0.00							
200 Packaging Packaging	Identify as per dwg & Stock Location: GA	0.00							11/04/13 0
	Memo w/o 67910	0.00							

Dart Aerospace Ltd

W/O:		WORK ORDER CHANGES					
DATE	STEP	PROCEDURE CHANGE	By	Date	Qty	Approval Chief Eng / Prod Mgr	Approval QC Inspector

Part No: _____ **PAR #:** _____ **Fault Category:** _____ **NCR:** Yes No **DQA:** _____ **Date:** _____

Resolution: _____ **Disposition:** _____ **QA: N/C Closed:** _____ **Date:** _____

NCR:		WORK ORDER NON-CONFORMANCE (NCR)						
DATE	STEP	Description of NC Section A	Corrective Action Section B			Verification Section C	Approval Chief Eng	Approval QC Inspector
			Initial Chief Eng	Action Description Chief Eng	Sign & Date			

NOTE: Date & initial all entries

H:\fFORMS\Quality Assurance\approved QA\NCRWO RevE

Work Order ID 68041

Tuesday, April 05, 2011 3:12:35 PM

Item ID: D3915-041

Revision ID:

Item Name: Light Lid Assemby, Long Basket

Start Date: 4/5/2011 **Start Qty:** 1.00

Required Date: 4/8/2011 **Req'd Qty:** 1.00

Reference:

Accept

Setup Start

Stop

Cust Item ID:

Customer:

Run Start

Stop

Approvals: **Process Plan:** _____ **Date:** _____ **Tooling:** _____ **Date:** _____

QC: _____ **Date:** _____ **SPC (Y/N):** _____ **Date:** _____

Sequence ID/ Work Center ID	Operation Description	Set Up/ Run Hours	Tool ID	Tool #	Plan Code	Accept Qty	Reject Qty	Reject Number	Insp. Stamp
210	QC21- Final Inspection - Work Order Release	0.00						11/4	114
QC Quality Control	**Memo**	0.00							

MF

11-04-13

Dart Aerospace Ltd

W/O:		WORK ORDER CHANGES					
DATE	STEP	PROCEDURE CHANGE	By	Date	Qty	Approval Chief Eng / Prod Mgr	Approval QC Inspector

Part No: _____ **PAR #:** _____ **Fault Category:** _____ **NCR:** Yes No **DQA:** _____ **Date:** _____

Resolution: _____ **Disposition:** _____ **QA: N/C Closed:** _____ **Date:** _____

NCR:		WORK ORDER NON-CONFORMANCE (NCR)						
DATE	STEP	Description of NC Section A	Corrective Action Section B			Verification Section C	Approval Chief Eng	Approval QC Inspector
			Initial Chief Eng	Action Description Chief Eng	Sign & Date			

NOTE: Date & initial all entries

Picklist Print

Tuesday, April 05, 2011 3:12:39 PM

Work Order ID: 68041

Parent Item: D3915-041

Parent Item Name: Light Lid Assemby, Long Basket

Start Date: 4/5/2011 **Required Date:** 4/8/2011

Start Qty: 1.00 **Required Qty:** 1.00

Comments: IPP Rev:A new issue DD 10.03.19 verified by:EC IPP Rev:B as per dwg revB DD 10.04.20 verified by:EC IPP Rev:C add realodine DD 10.04.26 verified by:EC IPP Rev:D as per dwg revC DD 10.08.18 verified by:EC

Component Item ID/ Item Name	Replacement Item ID	Mfg/ Purch	Bin Item	Primary Location	Last Location	Route Seq ID	Unit of Measure	Qty on Hand	Qty per Kit	Total Qty	Qty Issued	Date Issued	Status
D2957		Manufactured	No			100	Each	15.0000	4	4			
Mounting Plate											11·04·07		
				Location		**Loc Qty**		**Loc Code**					
				WA005		15							
					63664	5				1x			
					63750	10				3x			
D3915-1		Manufactured	No			100	Each	4.0000	2	2			
Rib											11·04·07		
				Location		**Loc Qty**		**Loc Code**					
				WA006		4							
					66616	4				2x			
D4016-5		Manufactured	No			100	Each	15.0000	3	3			
Hinge Half, Light Lid											11·04·07		
				Location		**Loc Qty**		**Loc Code**					
				WA005		15							
					63751	1							
					66335	8							
					66541	6				3x			

Dart Aerospace Ltd

W/O:		WORK ORDER CHANGES					
DATE	STEP	PROCEDURE CHANGE	By	Date	Qty	Approval Chief Eng / Prod Mgr	Approval QC Inspector

Part No: _____ **PAR #:** _____ **Fault Category:** _____ **NCR:** Yes No **DQA:** _____ **Date:** _____

Resolution: _____ **Disposition:** _____ **QA: N/C Closed:** _____ **Date:** _____

NCR:		WORK ORDER NON-CONFORMANCE (NCR)						
DATE	STEP	Description of NC Section A	Corrective Action Section B			Verification Section C	Approval Chief Eng	Approval QC Inspector
			Initial Chief Eng	Action Description Chief Eng	Sign & Date			

NOTE: Date & initial all entries

Picklist Print

Tuesday, April 05, 2011 3:12:39 PM

Work Order ID: 68041

Parent Item: D3915-041

Parent Item Name: Light Lid Assemby, Long Basket

Start Date: 4/5/2011 **Required Date:** 4/8/2011

Start Qty: 1.00 **Required Qty:** 1.00

D4019-3 Rib	Manufactured	No	100	Each	3.0000	3	3	B66726 (3x) 11·04·07

Location	Loc Qty	Loc Code
WA006	3	
64430	3	

D4035-045 Lid Rib Assembly, Fwd (Light)	Manufactured	No	100	Each	2.0000	1	1	11·04·07

Location	Loc Qty	Loc Code
WA006	2	
64431	1	
66539	1	(1x)

D4035-047 Lid Rib Assembly, Aft (Light)	Manufactured	No	100	Each	2.0000	1	1	11·04·07

Location	Loc Qty	Loc Code
WA006	2	
66540	2	(1x)

D4056-1 Label Plate	Manufactured	No	100	Each	5.0000	1	1	11·04·07

Location	Loc Qty	Loc Code
WA005	5	
58308	3	(1x)
59750	2	

D2728-1 Dart Logo label	Manufactured	No	180	Each	0.0000	1	1	

Dart Aerospace Ltd

W/O:		WORK ORDER CHANGES					
DATE	STEP	PROCEDURE CHANGE	By	Date	Qty	Approval Chief Eng / Prod Mgr	Approval QC Inspector

Part No: _____ **PAR #:** _____ **Fault Category:** _____ **NCR:** Yes No **DQA:** _____ **Date:** _____

Resolution: _____ **Disposition:** _____ **QA: N/C Closed:** _____ **Date:** _____

NCR:		WORK ORDER NON-CONFORMANCE (NCR)						
DATE	STEP	Description of NC Section A	Corrective Action Section B			Verification Section C	Approval Chief Eng	Approval QC Inspector
			Initial Chief Eng	Action Description Chief Eng	Sign & Date			

NOTE: Date & initial all entries

Picklist Print

Tuesday, April 05, 2011 3:12:40 PM

Work Order ID: 68041

Parent Item: D3915-041

Parent Item Name: Light Lid Assemby, Long Basket

Start Date: 4/5/2011 **Required Date:** 4/8/2011

Start Qty: 1.00 **Required Qty:** 1.00

D4029-041	Manufactured	No	180	Each	1.0000	1	1	SB 11/04/13
Webbing (Long Basket)								

Location	Loc Qty	Loc Code	
st503	1		
58109	1		1

MS20600-AD4W3	Purchased	No	180	Each	931.0000	34	34	SB 11/04/13
Cherry Rivets								

Location	Loc Qty	Loc Code	
ST321	494		
111636	494		34
WA018	437		
107939	437		

NAS1149DN416J	Purchased	No	180	Each	419.0000	34	34	SB 11/04/13
Washer								

Location	Loc Qty	Loc Code	
ST298	419		
114348	11		
114597	323		34
13910	85		

Dart Aerospace Ltd

W/O:		WORK ORDER CHANGES					
DATE	STEP	PROCEDURE CHANGE	By	Date	Qty	Approval Chief Eng / Prod Mgr	Approval QC Inspector

Part No: _____ **PAR #:** _____ **Fault Category:** _____ **NCR:** Yes No **DQA:** _____ **Date:** _____

Resolution: _____ **Disposition:** _____ **QA: N/C Closed:** _____ **Date:** _____

NCR:		WORK ORDER NON-CONFORMANCE (NCR)						
DATE	STEP	Description of NC Section A	Corrective Action Section B			Verification Section C	Approval Chief Eng	Approval QC Inspector
			Initial Chief Eng	Action Description Chief Eng	Sign & Date			

NOTE: Date & initial all entries

H:\fFORMS\Quality Assurance\approved QA\NCRWO RevE

ITEM	QTY -041	P/N	DESCRIPTION
	X	D3915-041	LIGHT LID ASSY, LONG BASKET ASSY
1	1	D3915-101	BASKET LID WELDMENT ASSY
2	1	D2728-1	DART LOGO LABEL
3	1	D4029-041	WEBBING (LONG BASKET)
4	34	MS20600AD4W3	BLIND RIVET
5	34	NAS1149DN416J	WASHER

C

SHOP COPY
RETURN TO
ENGINEERING
UNCONTROLLED COPY
SUBJECT TO AMENDMENT
WITHOUT NOTICE
WORK ORDER
NO. 68044 pl 11-04-5

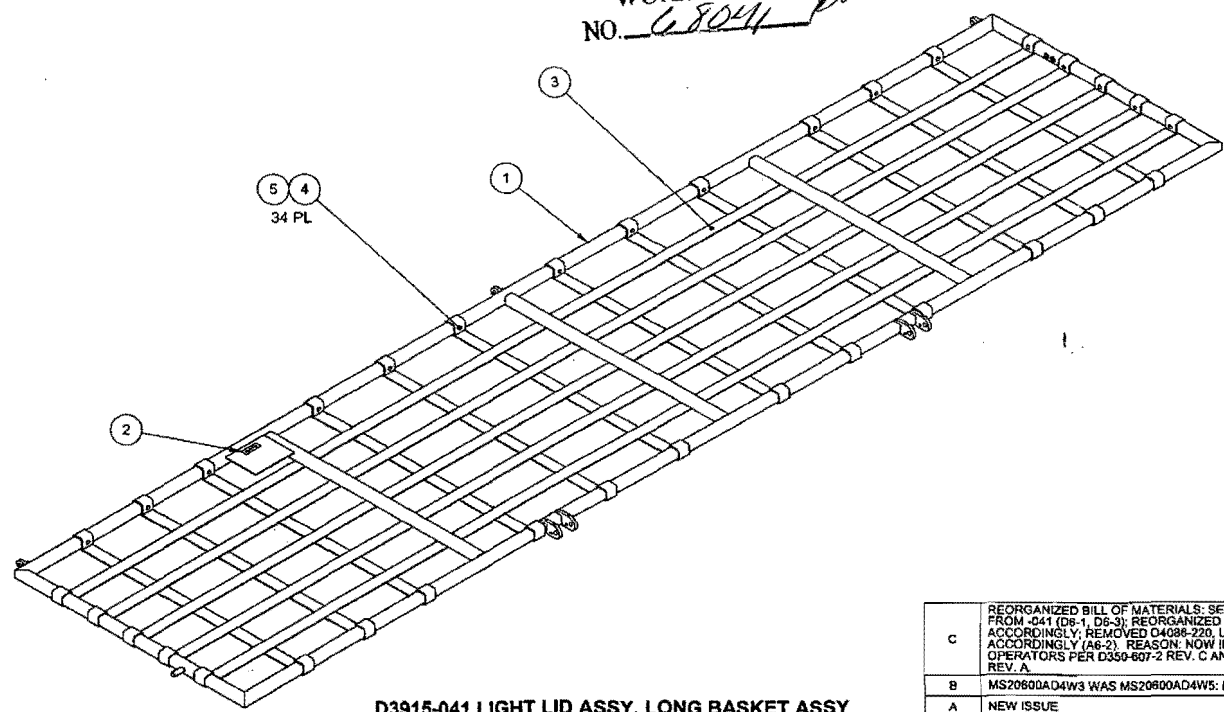

RELEASED
10-08-12 CP
ECN 10-596

D3915-041 LIGHT LID ASSY, LONG BASKET ASSY

NOTES:
1) MATERIAL: N/A
2) FINISH: N/A
3) TOLERANCES: PER DART QSI 018 UNLESS OTHERWISE NOTED
4) UNITS: INCHES UNLESS OTHERWISE NOTED
5) BREAK SHARP EDGES: N/A
6) IDENTIFICATION: NONE
7) WEIGHT: 6.91 lbs

REV.	DESCRIPTION	BY	DATE
C	REORGANIZED BILL OF MATERIALS: SEPARATED -101 FROM -041 (D6-1, D6-3); REORGANIZED VIEWS ON SHT 3 ACCORDINGLY; REMOVED D4086-220, UPDATED VIEW E ACCORDINGLY (A6-2). REASON: NOW INSTALLED BY OPERATORS PER D350-607-2 REV. C AND D350-607-3 REV. A	MB	10.08.05
B	MS20600AD4W3 WAS MS20600AD4W5: BOM & (B1-2)	JPH	10.04.06
A	NEW ISSUE	JPH	10.03.16

DESIGN	AJS	DART AEROSPACE LTD HAWKESBURY, ONTARIO, CANADA
DRAWN		
CHECKED		DRAWING NO. D3915 — REV. C — SHEET 1 OF 4
MFG. APPR.		
APPROVED		TITLE: LIGHT LID ASSY-LONG BASKET — SCALE: NTS
DE APPR.		
DATE	10.08.05	

COPYRIGHT © 2016 BY DART AEROSPACE LTD
THIS DOCUMENT IS PRIVATE AND CONFIDENTIAL AND IS SUPPLIED ON THE EXPRESS CONDITION THAT IT IS NOT TO BE USED FOR ANY PURPOSE OR COPIED OR COMMUNICATED TO ANY OTHER PERSON WITHOUT WRITTEN PERMISSION FROM DART AEROSPACE LTD.

Dart Aerospace Ltd

W/O:		WORK ORDER CHANGES					
DATE	STEP	PROCEDURE CHANGE	By	Date	Qty	Approval Chief Eng / Prod Mgr	Approval QC Inspector

Part No: _____ **PAR #:** _____ **Fault Category:** _____ **NCR:** Yes No **DQA:** _____ **Date:** _____

Resolution: _____ **Disposition:** _____ **QA: N/C Closed:** _____ **Date:** _____

NCR:		WORK ORDER NON-CONFORMANCE (NCR)						
DATE	STEP	Description of NC Section A	Corrective Action Section B			Verification Section C	Approval Chief Eng	Approval QC Inspector
			Initial Chief Eng	Action Description Chief Eng	Sign & Date			

NOTE: Date & initial all entries

w/o 68041

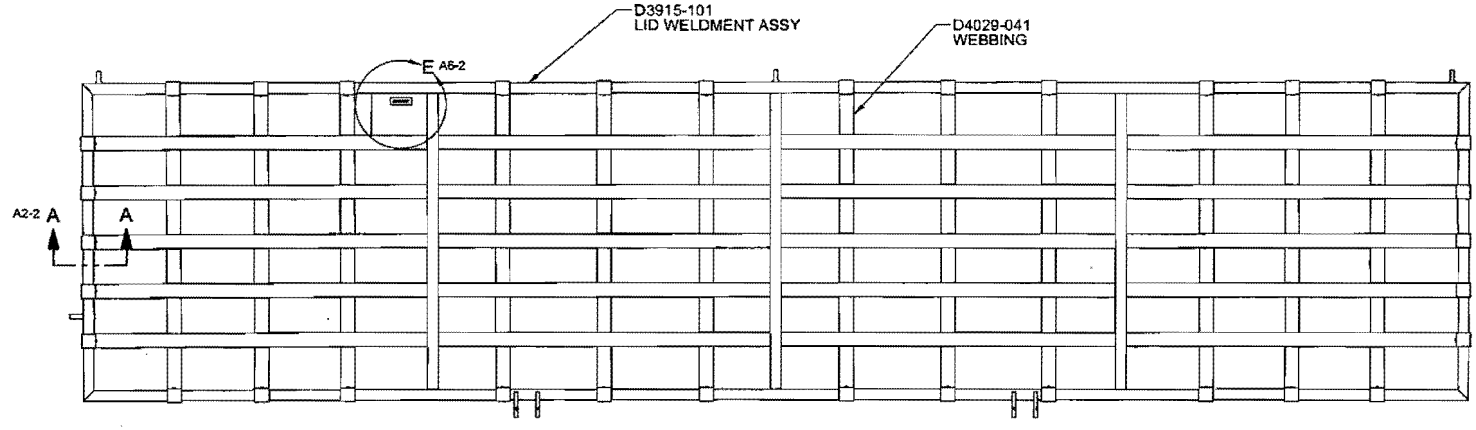

D3915-041 LIGHT LID ASSY, LONG BASKET

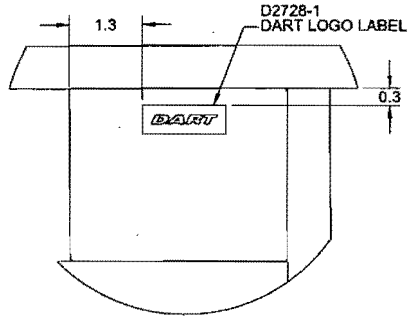

C **VIEW E** D6-2

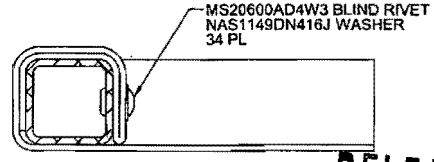

SECTION A-A C8-2

RELEASED 10.08.17

DESIGN	AJS	**DART AEROSPACE LTD** HAWKESBURY, ONTARIO, CANADA
DRAWN		
CHECKED		DRAWING NO. D3915 — REV. C — SHEET 2 OF 4
MFG. APPR.		
APPROVED		TITLE: LIGHT LID ASSY-LONG BASKET — SCALE: NTS
DE APPR.		
DATE	10.08.05	

COPYRIGHT © 2018 BY DART AEROSPACE LTD
THIS DOCUMENT IS PRIVATE AND CONFIDENTIAL AND IS SUPPLIED ON THE EXPRESS CONDITION THAT IT IS NOT TO BE USED FOR ANY PURPOSE OR COPIED OR COMMUNICATED TO ANY OTHER PERSON WITHOUT WRITTEN PERMISSION FROM DART AEROSPACE LTD.

Dart Aerospace Ltd

W/O:		WORK ORDER CHANGES					
DATE	STEP	PROCEDURE CHANGE	By	Date	Qty	Approval Chief Eng / Prod Mgr	Approval QC Inspector

Part No: _____ **PAR #:** _____ **Fault Category:** _____ **NCR:** Yes No **DQA:** _____ **Date:** _____

Resolution: _____ **Disposition:** _____ **QA: N/C Closed:** _____ **Date:** _____

NCR:		WORK ORDER NON-CONFORMANCE (NCR)						
DATE	STEP	Description of NC Section A	Corrective Action Section B			Verification Section C	Approval Chief Eng	Approval QC Inspector
			Initial Chief Eng	Action Description Chief Eng	Sign & Date			

NOTE: Date & initial all entries

H:\fFORMS\Quality Assurance\approved QA\NCRWO RevE

ITEM	QTY -101	P/N	DESCRIPTION
	X	D3915-101	BASKET LID WELDMENT ASSY
1	4	D2957	MOUNTING PLATE
2	2	D3915-1	RIB
3	3	D4016-5	HINGE HALF, LIGHT LID
4	3	D4019-3	RIB
5	1	D4035-045	BASKET LID RIB ASSY, FWD (LIGHT)
6	1	D4035-047	BASKET LID RIB ASSY, AFT (LIGHT)
7	1	D4056-1	LABEL PLATE, 350 LIGHT BASKET

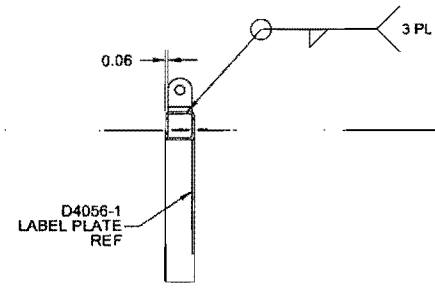

DETAIL C C8-3

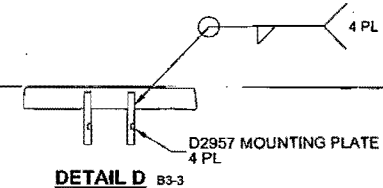

DETAIL D B3-3

w/o 68044

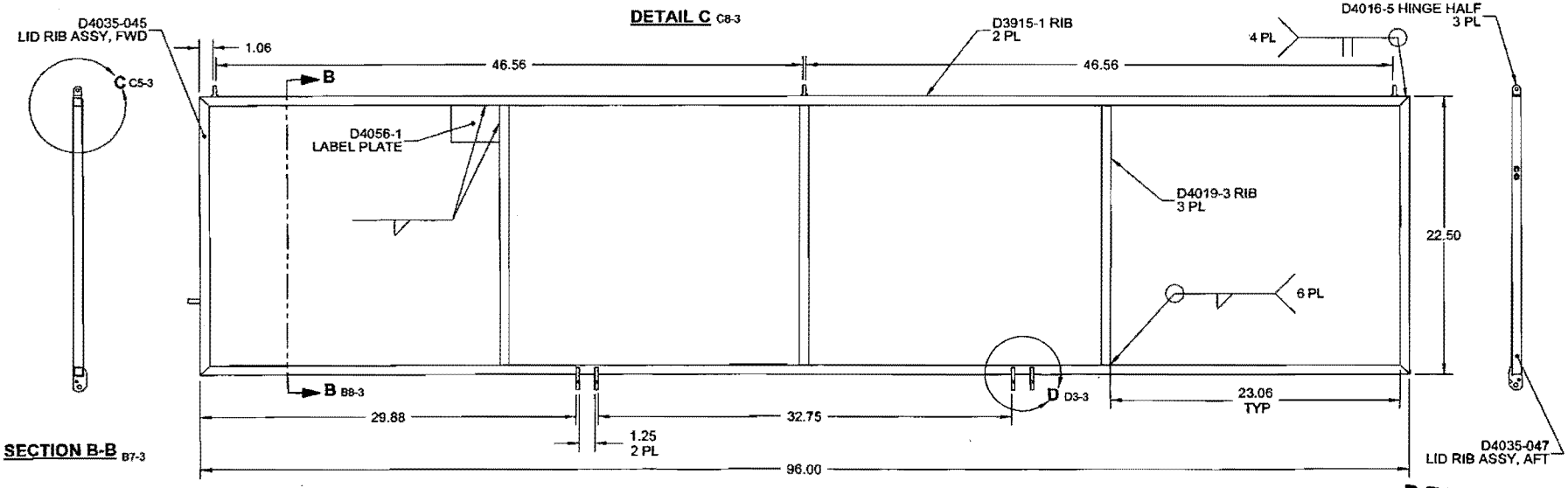

SECTION B-B B7-3

D3915-101 BASKET LID WELDMENT ASSY

RELEASED 10.08.12

NOTES:
1) MATERIAL: N/A
2) FINISH: CHEMICAL CONVERSION COAT PER DART QSI 005 4.1
POWDER COAT WHITE (4.3.5.1) PER DART QSI 005 4.3
3) TOLERANCES: PER DART QSI 018 UNLESS OTHERWISE NOTED
4) UNITS: INCHES UNLESS OTHERWISE NOTED
5) BREAK SHARP EDGES: 0.005 TO 0.010 MAX
6) IDENTIFICATION: NONE
7) WEIGHT: 4.81 lbs
8) WELD PER DART QSI 004

DESIGN	AJS	DART AEROSPACE LTD HAWKESBURY, ONTARIO, CANADA
DRAWN		
CHECKED		DRAWING NO. D3915 — REV. C — SHEET 3 OF 4
MFG. APPR.		
APPROVED		TITLE: LIGHT LID ASSY-LONG BASKET — SCALE: NTS
DE APPR.		
DATE	10.08.05	

COPYRIGHT © 2010 BY DART AEROSPACE LTD
THIS DOCUMENT IS PRIVATE AND CONFIDENTIAL AND IS SUPPLIED ON THE EXPRESS CONDITION THAT IT IS NOT TO BE USED FOR ANY PURPOSE OR COPIED OR COMMUNICATED TO ANY OTHER PERSON WITHOUT WRITTEN PERMISSION FROM DART AEROSPACE LTD.

Dart Aerospace Ltd

W/O:	WORK ORDER CHANGES						
DATE	STEP	PROCEDURE CHANGE	By	Date	Qty	Approval Chief Eng / Prod Mgr	Approval QC Inspector

Part No: _____ PAR #: _____ Fault Category: _____ NCR: Yes No DQA: _____ Date: _____

Resolution: _____ Disposition: _____ QA: N/C Closed: _____ Date: _____

NCR:	WORK ORDER NON-CONFORMANCE (NCR)							
DATE	STEP	Description of NC Section A	Corrective Action Section B			Verification Section C	Approval Chief Eng	Approval QC Inspector
			Initial Chief Eng	Action Description Chief Eng	Sign & Date			

NOTE: Date & initial all entries

H:\fFORMS\Quality Assurance\approved QA\NCRWO RevE

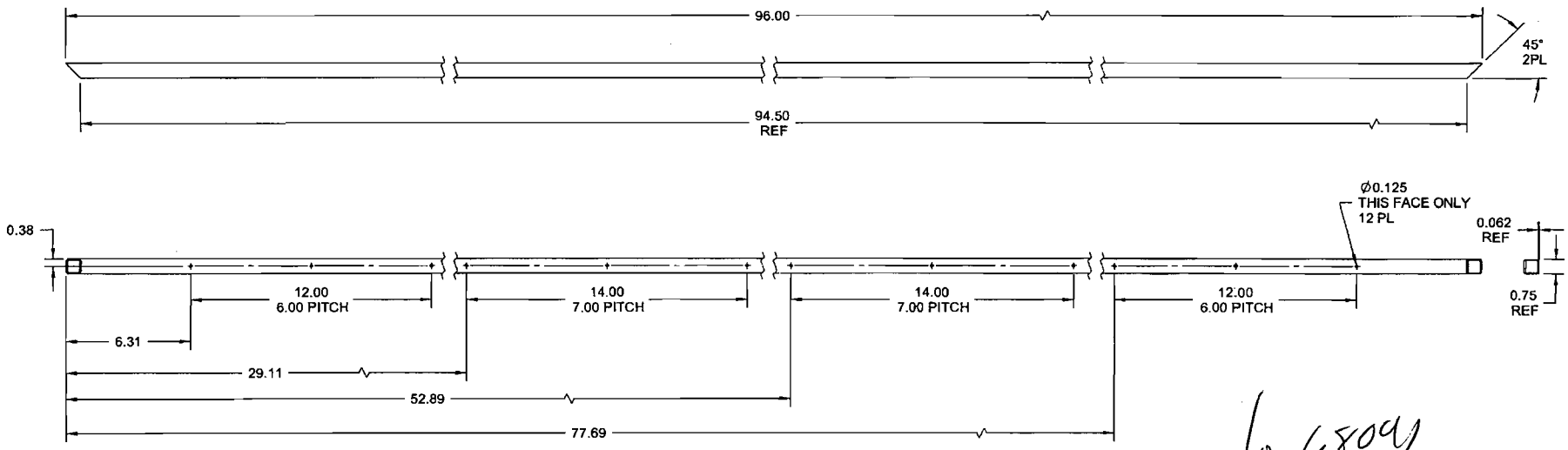

D3915-1 RIB

w/o 48094

RELEASED
10.09.12 CP

NOTES:
1) MATERIAL: 6061-T6 (OR 6061-T651/ T6510/ T6511/ T62) SQUARE TUBING
PER AMS-QQ-A-225/8 (OR AMS 4117/ 4128/ 4115 / 4116) OR
PER AMS-QQ-A-200/8 (OR AMS 4160)
REF DART SPEC. M6061T6TS0.750W.062
2) FINISH: NONE
3) TOLERANCES: PER DART QSI 018 UNLESS OTHERWISE NOTED
4) UNITS: INCHES UNLESS OTHERWISE NOTED
5) BREAK SHARP EDGES: 0.005 TO 0.010 MAX
6) IDENTIFICATION: NONE
7) WEIGHT: 1.49 lbs

DESIGN	AJS	DART AEROSPACE LTD HAWKESBURY, ONTARIO, CANADA
DRAWN		
CHECKED	SC	DRAWING NO. D3915 — REV. C
MFG. APPR.		SHEET 4 OF 4
APPROVED		TITLE — SCALE
DE APPR.		LIGHT LID ASSY-LONG BASKET — NTS
DATE	10.08.05	

COPYRIGHT © 2010 BY DART AEROSPACE LTD
THIS DOCUMENT IS PRIVATE AND CONFIDENTIAL AND IS SUPPLIED ON THE EXPRESS CONDITION THAT IT IS NOT TO BE USED FOR ANY PURPOSE OR COPIED OR COMMUNICATED TO ANY OTHER PERSON WITHOUT WRITTEN PERMISSION FROM DART AEROSPACE LTD.

Dart Aerospace Ltd

W/O:		WORK ORDER CHANGES					
DATE	STEP	PROCEDURE CHANGE	By	Date	Qty	Approval Chief Eng / Prod Mgr	Approval QC Inspector

Part No: _____ **PAR #:** _____ **Fault Category:** _____ **NCR:** Yes No **DQA:** _____ **Date:** _____

Resolution: _____ **Disposition:** _____ **QA: N/C Closed:** _____ **Date:** _____

NCR:		WORK ORDER NON-CONFORMANCE (NCR)						
DATE	STEP	Description of NC Section A	Corrective Action Section B			Verification Section C	Approval Chief Eng	Approval QC Inspector
			Initial Chief Eng	Action Description Chief Eng	Sign & Date			

NOTE: Date & initial all entries